➢□□□

□□□□□2.5□□□□

22:00□□□

2.5

[illegible]

1. [illegible].

2. [illegible].

3. [illegible]

1. [illegible]

(1) [illegible].

(2) [illegible] W [illegible] IUt.　　[illegible]

(3) [illegible] J.

(4) [illegible] [illegible] [illegible].

(5) [illegible] [illegible] [illegible].

2. [illegible]

(1) [illegible]__[illegible]__[illegible].

(2) [illegible] P[illegible]$\frac{W}{t}$[illegible]__IU__.

(3) [illegible]__W__.

(4) [illegible]__[illegible]__.

(5) [illegible]__[illegible]__[illegible].

(1) [illegible] ([illegible]) [illegible] . [illegible] .

(2) [illegible] . [illegible] .

1. [illegible]

(1) [illegible]______[illegible] [illegible]______[illegible] [illegible]______[illegible] ____

[illegible] [illegible] [illegible].

(2) [illegible] [illegible] Q＝ I^2Rt

(3) [illegible]____[illegible] [illegible].

2. [illegible]

(1) [illegible]____[illegible] [illegible].

(2) [illegible] P＝ I^2R.

(3) [illegible]____[illegible] [illegible].

[illegible]

1. [illegible]

W[illegible] UIt [illegible] P[illegible] UI [illegible].

2. [illegible]

Q[illegible] I^2Rt [illegible] $P_{[illegible]}$[illegible] I^2R [illegible].

3. [illegible]

(1) [illegible].

(2) [illegible].[illegible]

[illegible].

[illegible]

	[illegible]	[illegible]
[illegible]	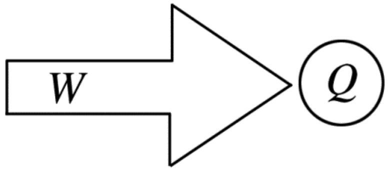	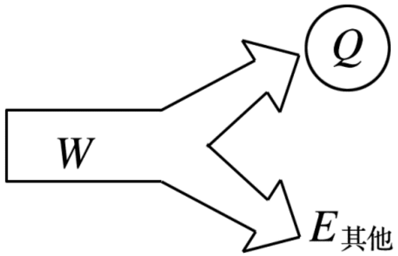
[illegible]	$W = Q = IUt = I^2Rt = \frac{U^2}{R}t$	$W > Q$ $W = Q + E_{其他}$ $UIt = I^2Rt + E_{其他}$

[illegible]

□□□□□□□□□□□	P □ $P_{□}$□ □IU□I^2R□$\frac{U^2}{R}$	$P_{□}>P_{□}$ P□$P_{□}$□$P_{□□}$ □IU□I^2R□$P_{□□}$
□□□□□□□□□	U□IR　I□$\frac{U}{R}$ □□	U□IR　I□$\frac{U}{R}$ □□□

□□□□□□□□□□□□□□□□□□□□□□□IU□I^2R□$P_{□□}$

[illegible] [illegible]（ ）

A. [illegible]

B. $W = IUt$ [illegible] $W = I^2Rt = \frac{U^2}{R}t$ [illegible]

C. [illegible] $IU > I^2R$

√ D. [illegible] $Q = I^2Rt$ [illegible]

√

√

□□□□□□□□□□□“ 220 V　　50 W” □□□□□□□□□□

0.4 Ω □□□□□ 220 V □□□□□□□□□□□□□ t □□□□□□

□□□□□□

A. Q□ $\frac{U^2t}{R}$　　　　B. Q□ Pt

√ C. Q□ $\left(\frac{P}{U}\right)^2Rt$　　　　D. □ □ □ □ □ □ □ □ □

[illegible]

1.[illegible] W [illegible] Q [illegible] I [illegible] $\frac{U}{R}$ [illegible] UI [illegible] I^2R [illegible] $\frac{U^2}{R}$.

2. [illegible]

	[illegible]	[illegible]
[illegible]	$\frac{P_1}{P_2}$ [illegible] $\frac{R_1}{R_2}$	$\frac{P_1}{P_2}$ [illegible] $\frac{R_2}{R_1}$
[illegible]	P [illegible] P_1 [illegible] P_2 [illegible] … [illegible] P_n	P [illegible] P_1 [illegible] P_2 [illegible] … [illegible] P_n

[illegible]

□ a □ b □□□□□□□□□□ .a □□□□□“ 220 V 40 W” □ b □□□□□“ 220 V 100 W”. □□□□ a □ b □□□□□ □□□□ U_a □ U_b □□□□□□□□ P_a □ P_b □□□□□□□□□□□□□ □ a □ b □□□□□□□ . □□□□□□□

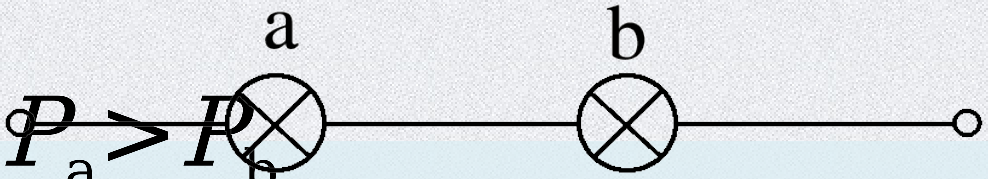

A. $U_a < U_b$ □ $P_a < P_b$ B. $U_a < U_b$ □ $P_a > P_b$

C. $U_a > U_b$ □ $P_a < P_b$ D. $U_a > U_b$ □ $P_a > P_b$

√

□□□□□□□□□□

□　□□□□□□ 110 V □□□□□ P_A □ 100 W □ P_B □ 40 W □□□□□□□□□□□□□ 220 V □□□□□□□□□□□□□□ □□□□□□□□□□□□□□□□

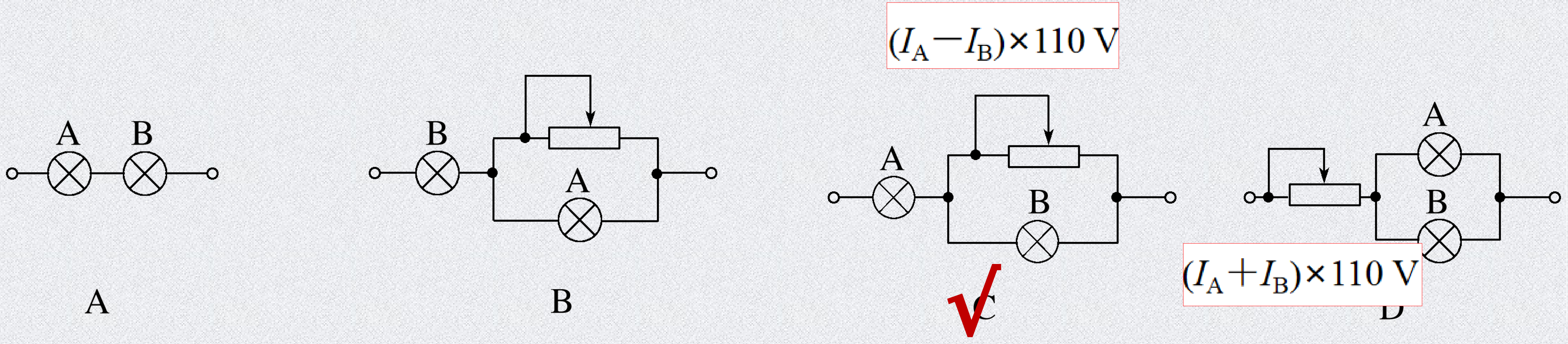

□□□□　□□□□□□□□□□4.4 Ω□□□□□□□□“ 110 V

60 W” □□□□□□□□□□220 V□□□□□□□□□□□□□□□

A. □□□□□□□□□120 W

B. □□□□□□□□60 W

C. □□□□□□□□□60 W

D. □□□□□□□□60 W

√

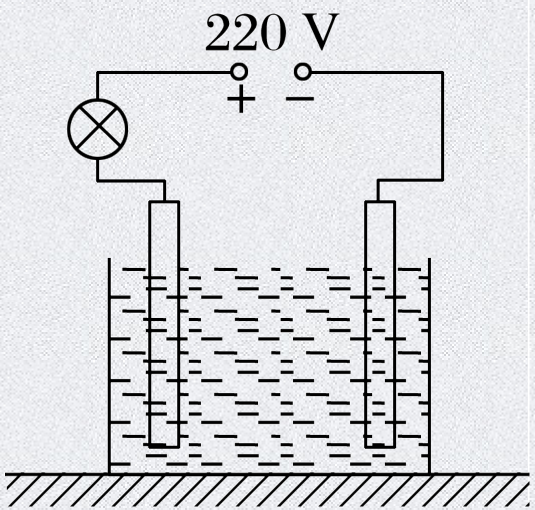

[illegible] [illegible]

[illegible]. [illegible] R [illegible]

[illegible] 0.5 A [illegible] 1.0 V [illegible] R [illegible]

[illegible]

2.0 A [illegible] 15.0 V. [illegible] (　　　)

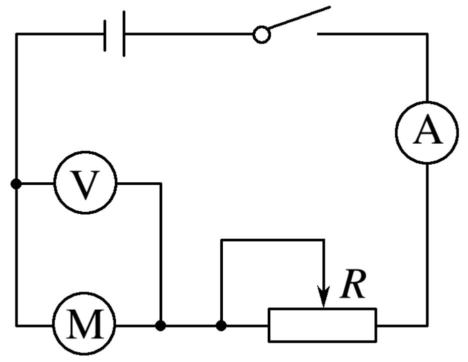

A. [illegible] 7.5 Ω

√ B. [illegible] 8.0 W

C. [illegible] 30 W

D. [illegible] 27%

[illegible]

[illegible]([illegible])[illegible] $P_{[illegible]}$ [illegible] IU.

[illegible] $P_{[illegible]}$ [illegible] I^2r.

[illegible]([illegible])[illegible] $P_{[illegible]}$ [illegible] IU [illegible] $I^2r=FV$

[illegible] η [illegible] $\frac{P_{[illegible]}}{P_{[illegible]}}$ [illegible] $\frac{IU - I^2r}{IU}$ [illegible] $1 - \frac{Ir}{U}$. [illegible]

[illegible].